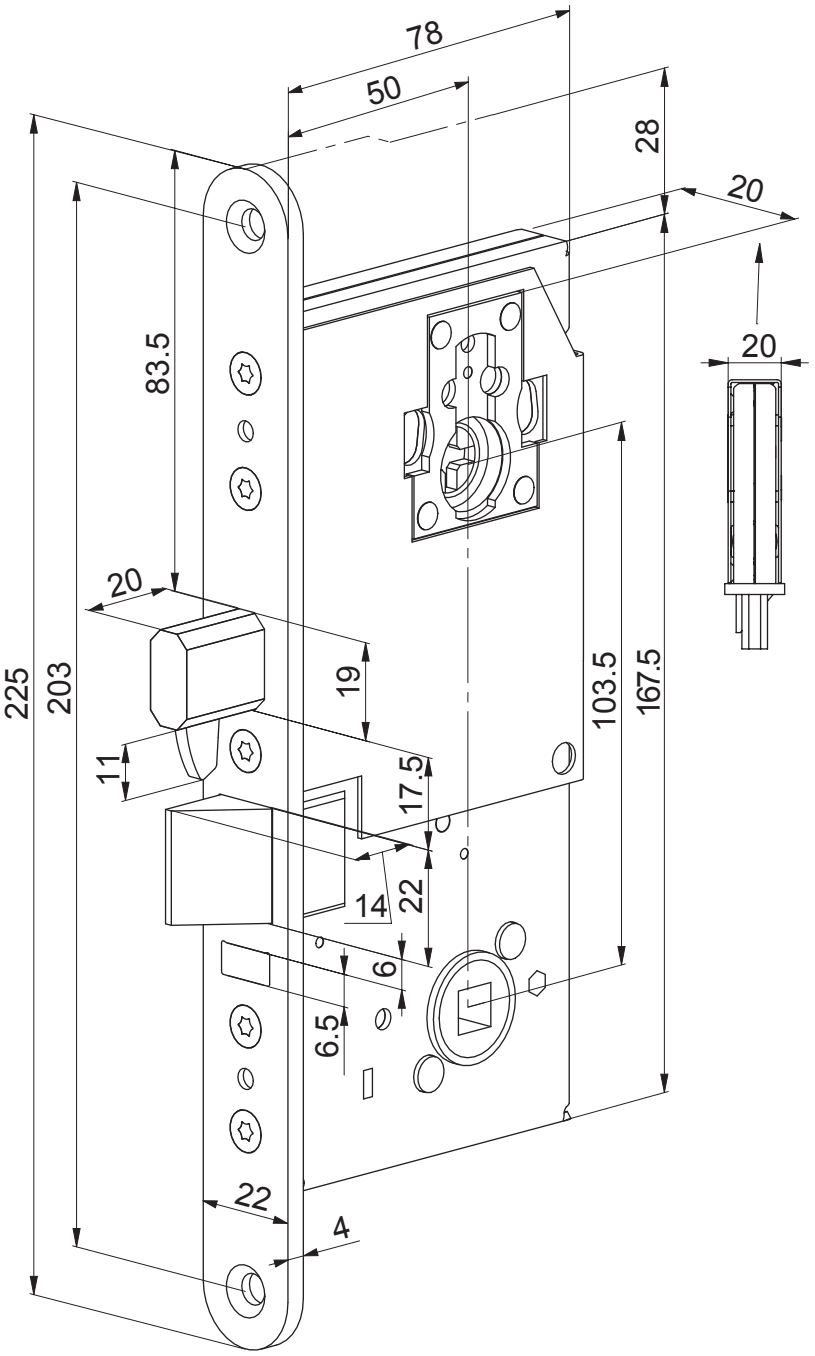
78
50
28
20
20
83.5
20
225
203
19
103.5
167.5
11
17.5
14
22
6
6.5
22
4